Laboratory Protocol for Evaluation of Cable Gun Locks
And Documentation of Inertial Release

Introduction

This document has been developed for use in evaluating cable-type gun locks that employ a cylinder mechanism that releases one end of the cable from the lock body. These cable locks are essentially padlocks, with a flexible cable (typically plastic-sheathed steel cable) in place of the solid metal shackle that most padlocks employ. See Fig. 1.

The procedures outlined below are not intended to constitute a definitive test of cable lock reliability. These evaluation criteria do not provide "pass" or "fail" results for individual locks. The protocol is intended to outline general tests to demonstrate the potential for inertial activation or other easy release of the lock, both on and off a firearm. The evaluation was initiated upon discovery that some cable-type gun locks could be readily opened by striking them against a rigid surface, or even by dropping them on the floor. This release occurs by inertial force of the deceleration causing the latching plate to compress its spring sufficiently to release the cable end. The purpose of this evaluation procedure is therefore to determine approximately how easily various cable gun locks may be opened other than by the intended use of their keys.

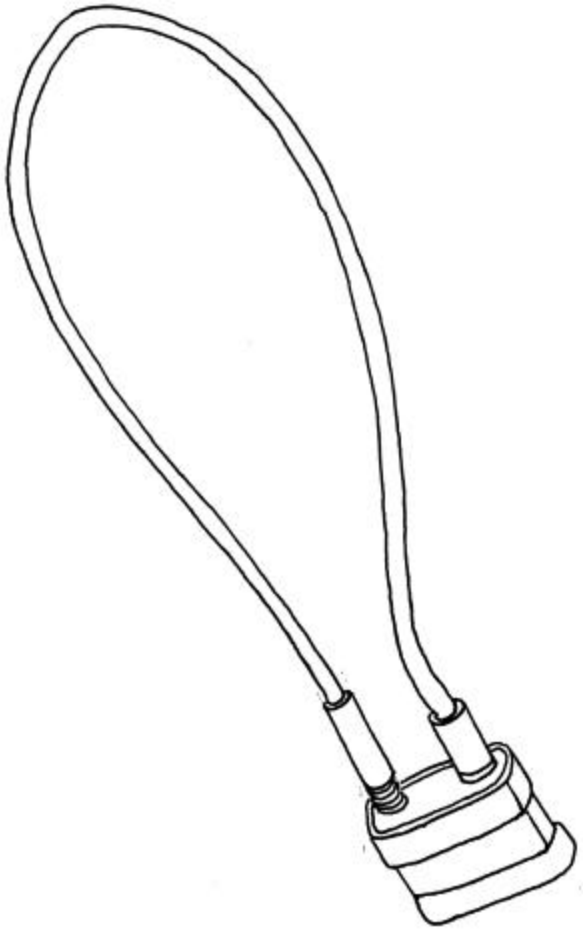

Fig. 1 Typical Cable-Type Gun Lock

1. **External Examination**
   Examine the lock to determine the direction of travel of the latching plate (the slider located just inside the cable-end insertion hole that restrains the cable end) during key activation. Note or mark the case of the lock indicating the side of the lock body that is in the direction of latching plate travel. This will be the impact side of the lock. (See Fig. 2)

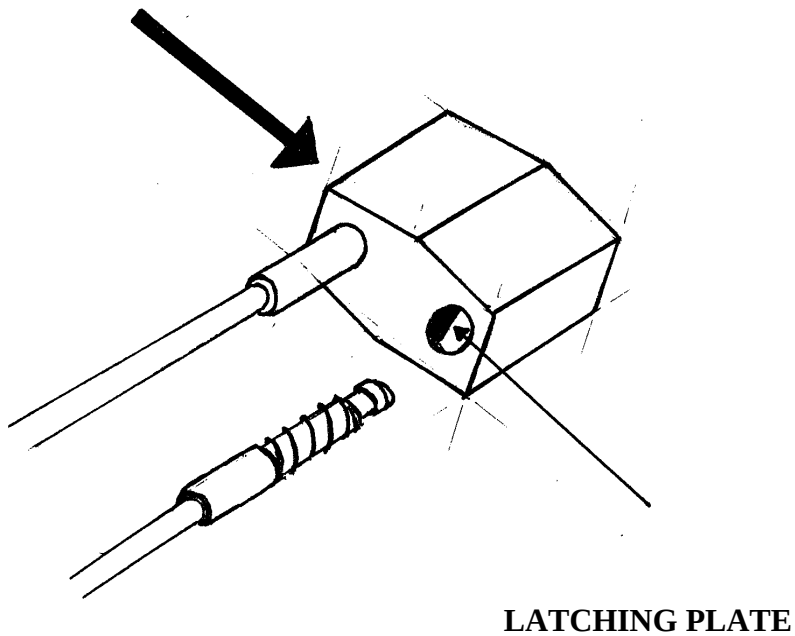

Fig. 2 Orienting Impact Side of Lock

2. **Off-the-Gun Impact Test**
   Close the lock and test it for inertial activation by striking the lock sharply against a rigid surface, such as a tiled concrete floor or a steel plate. This may be readily done by holding the lock by the cable loop and swinging it hard against the surface. The impact must be directed so that the impact surface strikes the floor squarely.

3. **Internal Examination**
   Disassemble the lock to allow a detailed examination and description of the internal components of the lock, including a description of its intended key activation as well as possible inertial or other release. See Fig. 3. Measure and record the spring force and travel necessary to effect release (i.e. force to depress the spring just far enough to release the cable end, measured from its normal locked position.) Weigh and record the latching plate and any other mass that must move to effect this inertial release.

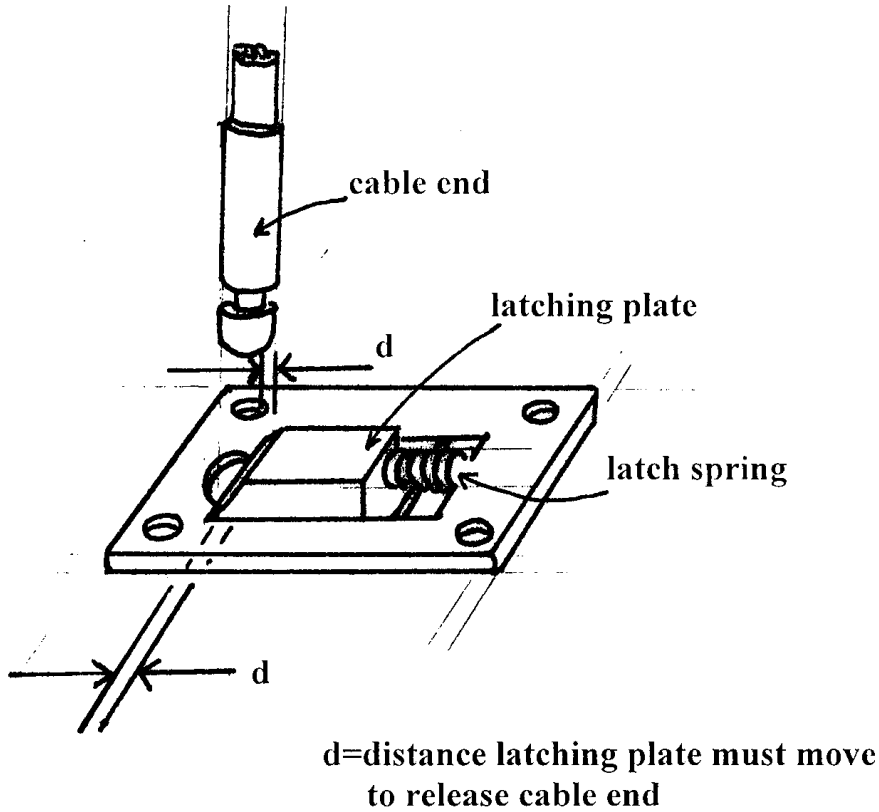

Fig. 3 Typical latching plate and latch spring configuration

4. Calculating Minimum Drop Height

Inertial compression of the latch spring occurs due to the force generated by the mass of the latching plate during deceleration. Knowing the distance the latch plate must move to release the cable end, and the spring force across this same distance, we can calculate the theoretical minimum drop height to effect inertial release.

Use the mass and spring force values measured above to calculate the theoretical minimum drop height using the following relationships. (An example calculation is provided in Appendix A.)

Step 1. Calculate the impact acceleration needed to generate the spring force.

$a = F/m$ where **F** = spring force in lb_f over the latch distance **d** in feet
m = mass of latching plate in slugs

Step 2. Calculate initial impact velocity needed to produce acceleration **a** across **d.**

$v = \sqrt{(2) \times (a) \times d}$ where **v** = impact velocity in ft/sec

Step 3. Calculate the drop height **h** that produces the velocity **v** due to gravitational acceleration **g**.

$$h = v^2 / (2\,g) \qquad \text{where } \mathbf{g} = 32.2 \text{ ft/sec}^2$$

h = drop height in feet

5. On-the-Gun Tests

Install the cable lock on a firearm according to one of the following drawings. If it is not possible to match the configuration of one of these drawings due to differences in gun design or size, install the lock in the most likely way that prevents or impedes use of the firearm.

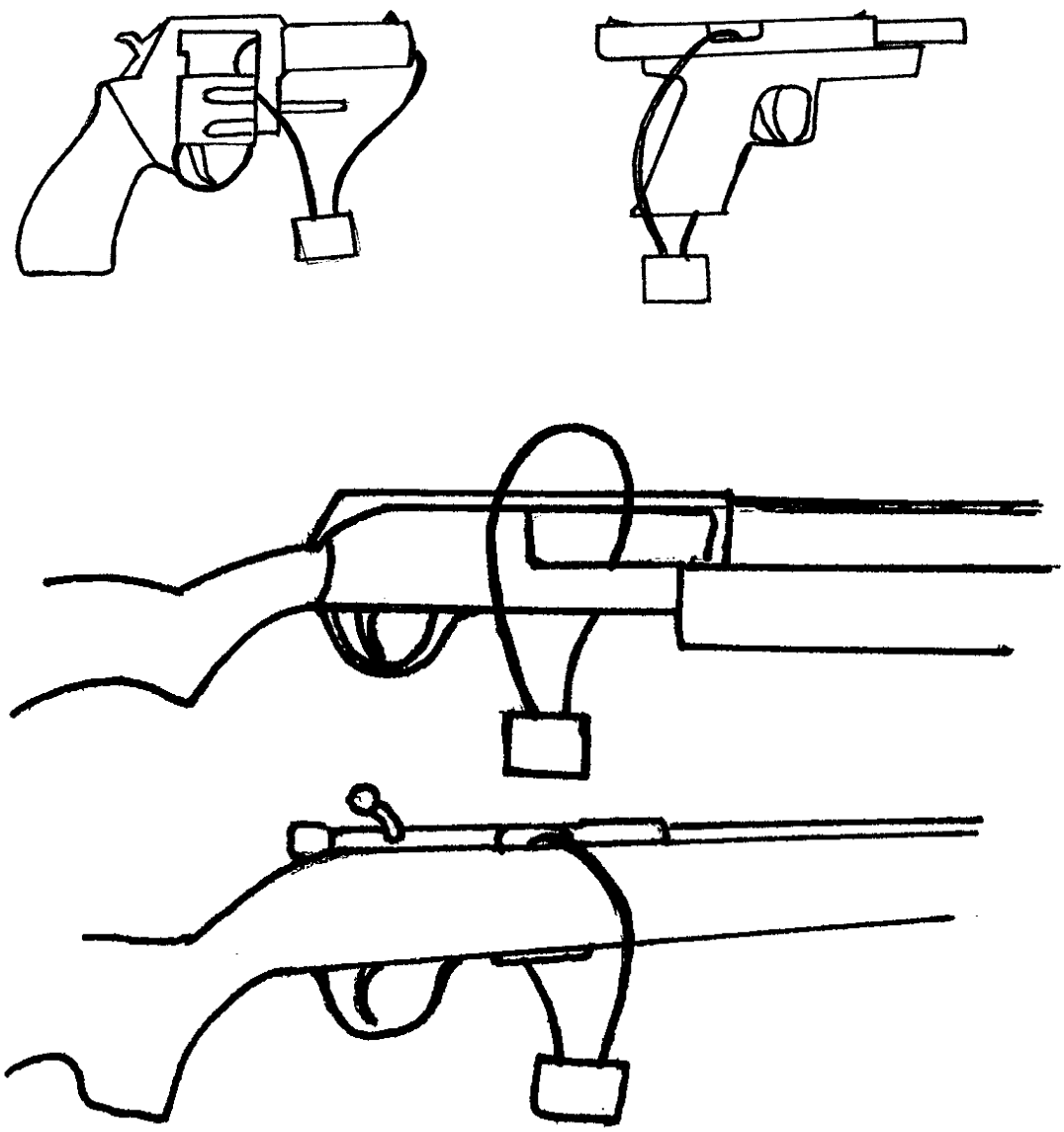

Fig. 4 Typical Cable Lock Installations

5.A. On-the-Gun Drop Test

Demonstrate the possibility of inertial release of the lock while installed by dropping the locked firearm repeatedly onto the floor or other solid surface from a height at least equal to the minimum drop height calculated in Section 4. This activation requires dropping the firearm and lock in the orientation most likely to result in release; that is, the impact side of the lock must strike the floor squarely, and preferably just before the firearm strikes the floor. Perform no more than ten trials, or until the lock releases.

5.B. On-the-Gun Impact Test

Demonstrate the possibility of inertial release of the lock while installed by whacking the lock against the solid surface. The firearm may be swung with the lock or the firearm may be held stationary while the lock itself is swung. The impact surface of the lock must strike the test surface squarely on the lock's impact side.

6. Hammer Strike

Holding the lock suspended by the cable loop, strike the impact side of the lock with a hammer to demonstrate inertial release.

Perform this demonstration with a 16 oz. Carpenter's hammer. (Note that test operator must use appropriate safety equipment including a face shield.) Other tools may be used in addition to the Carpenter's hammer if they help demonstrate the ease or difficulty of inertial release.

7. Cable Cutting Test

Use the sample that was disassembled in Test #3. Attempt to cut through the cable using hand-held diagonal cutters. Perform this test by inserting the cable fully into the jaws (positioned to give the greatest mechanical advantage) and squeeze the cutters using bare hands, and not bearing down on a solid surface. Note whether the force required was moderate, extreme, or required use of both hands. Additionally note who performed this test for later strength reference.

Sample Assignments for Each Step of the Tests

Various numbers of samples will be available for each manufacturer or model of cable gun lock. In order to maintain some samples in original condition, duplicate samples will be used for the tests as outlined below. If samples are destroyed in testing, re-assignments may be made at the tester's judgement. The goal is to use samples in an order that will afford the least influence on the results due to previous tests. Any deviation from the order specified below shall be recorded with the data entries for those samples. The right column below indicates the sample sub number to be used in each test.

Test	Sub
1. External Examination	1
2. Off-Gun Impact	1
3. Internal Examination	2
4. Calculation	N/A
5. On-Gun Tests	
5.A. Drop Test	3
5.B. Impact Test	4
6. Hammer Strike	1
7. Cable-Cutting	2

Appendix A

Cable Gun Lock 10·16·00 RWD

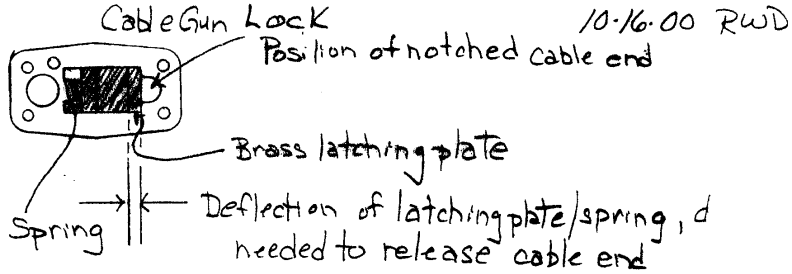

$d = 0.073$ in.

Force to deflect spring d is approx. 1.7 lb
weight of latching plate is 28 grains = 0.0602 = 3.75E-3 lb
Mass " " " " 1.164E-4 slugs

1. $a = F/m = \dfrac{1.7\,lb}{1.164E{-}4\ slugs} = 14{,}605\ ft/sec^2 \rightarrow 454g$

2. calc. drop velocity

$v = \sqrt{2 \cdot a \cdot d}$ where $d = 0.073\ in = 0.00608\ ft$

$v = \sqrt{(2)(14{,}605\ ft/sec^2)(.00608\ ft)}$

$v = 13.3\ ft/sec$

3. calc drop height

$h = \dfrac{v^2}{2 \cdot g}$

$h = \dfrac{(13.3\ ft/sec)^2}{(2)(32.2\ ft/sec^2)} = 2.75\ ft$