ENVIRONMENTAL HEALTH & ENGINEERING

Environmental Health & Engineering, Inc.

117 Fourth Avenue
Needham, MA
02494-2725

TEL 800-825-5343
781-247-4300
FAX 781-247-4305

www.eheinc.com

Home Inspection/Questionnair Form

House ID 083109VA02

Date 08/31/09

Field Technician(s) TXM

House Address (b)(6) Virginia Beach, VA

General Weather Description Rainy, cloudy

1. Questionnaire

1) Interviewed home owner YES NO

2) Age of the House (years)

Old 1955 New 2005

3) Estimated Floor Area (sqft)

5000 sqft. Old/New 1500/3500

4) Was as there any demo's to the house?

YES NO

If YES, when was it done? Please Explain.

2005, New part of house

5) Has there been any fire in the building?

YES NO

If YES, when did it happen? Please Explain.

6) Any pesticides/herbicides been applied around the building or in the yard?

YES NO

If YES, when was it applied? Please list the type of chemicals used.

pest control agency rat control, termites 1/4 poison. 1th a quarter

7) Has there been any recent painting/staining done in the home?

YES NO

If YES, when, where and what type of paint/stain was used?

_____.

8) Has any work been done on the AC system since construction?

YES NO

If YES, please describe?

_____.

9) Are all the AC system components original?

YES ← old house NO — New house.

If NO, please describe?

New compressor for the old house.

10) What is the age of your refrigerator?

4 years

11) Has any piping been replaced in the home?

YES NO

If YES, please describe?

_____.

2. Building Characteristics

1) Residential Type (Single/Multi-Family Building) If multi-family, how many units?

Single family

2) Number of rooms

15 5 bedrooms.

3) Above grade Construction blocks

Wood Frame Concrete Stone Brick Other _____

4) Basement

Full Crawlspace Slab Other _____

5) Foundation

Concrete Cinder Block Stone Other_____

6) Garage

YES NO

If YES, Attached Detached

If YES, Used for Car Parking? YES NO

If YES, Any gas-powered equipment or cans of gasoline/fuels stored?

YES NO

7) Type of HVAC System

_____.

Make _____ HVAC Model _____ Condenser Model _____

8) Types of Fuel (circle all that apply) old part

New Natural Gas Fuel Oil Kerosene Electric

Propane Solar Wood Coal

9) Water Supply

Public Well Other _____

sprinkler

10) Sewage

Public Septic Leach Field Other _____

11) Attic

Finished Unfinished

3. Interior Characteristics

1) Any odors upon entering the building?

YES NO

If YES, describe _____

2) Fireplace

YES NO

3) Floors (circle all that apply)

Hardwood Carpet Ceramic Tile Vinyl Tile

Unfinished Wood Unfinished Concrete Other lamint tile

4) Walls (circle all that apply)

Wall Paper Paint Skim Coat Textured

Wood or Wood Paneling Other sheet rock mud., joint compounds

5) Ceiling (circle all that apply)

Wall Paper Paint Skim Coat Textured

Wood or Wood Paneling Other _____

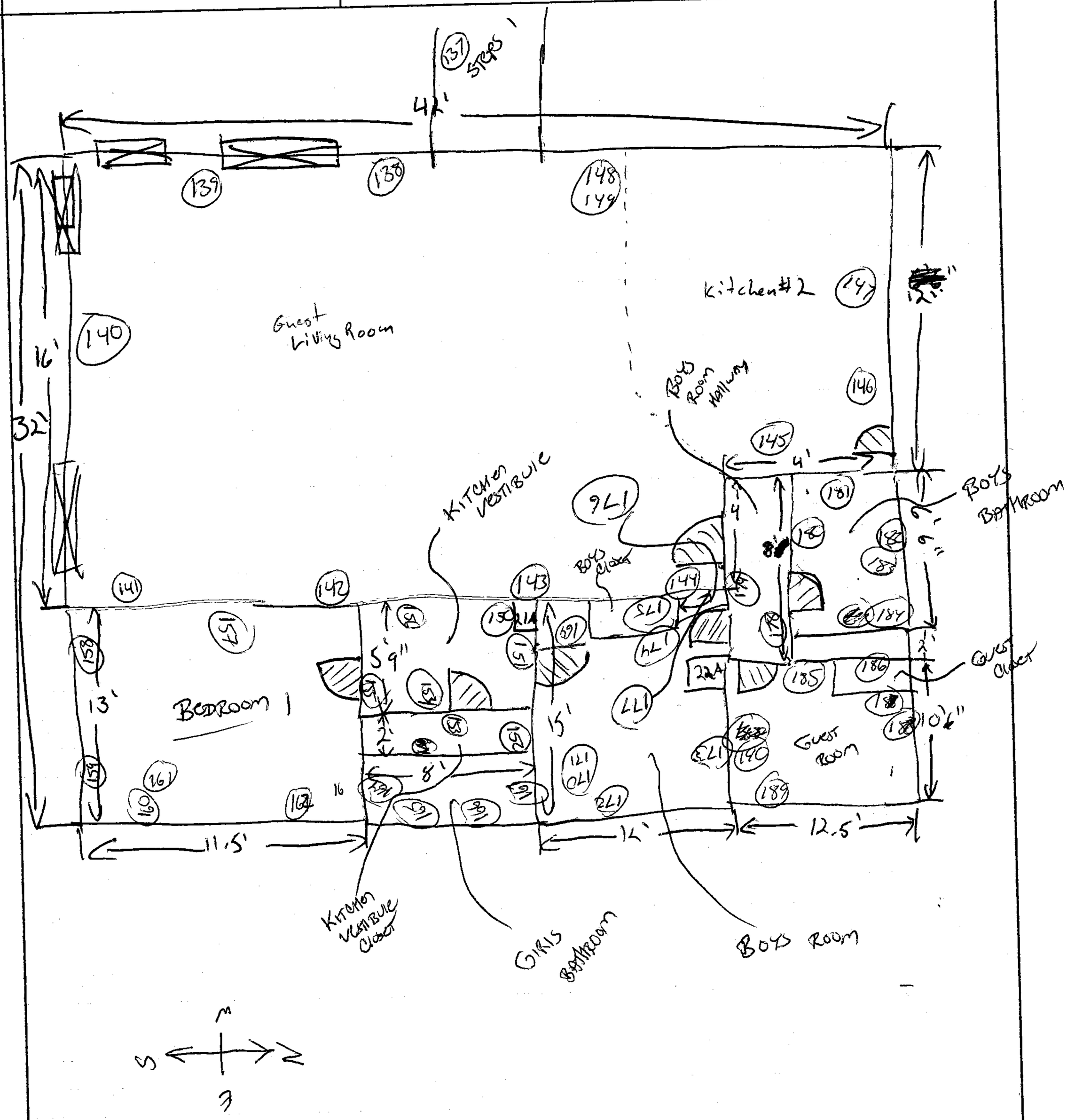
137
STEPS
42'
139
138
148
149
Kitchen #2
147
12"
Guest Living Room
140
16'
32'
Boys Room Hallway
146
145
4'
KITCHEN VESTIBULE
Boys Bathroom
Boys Closet
141
142
143
144
181
180
182
183
184
158
157
5'9"
150
214
151
2'
13'
Bedroom 1
15'
224
185
186
Guest Closet
2'
10'6"
Guest Room
190
189
159
161
160
162
16
8'
11.5'
12'
12.5'
Kitchen Vestibule Closet
Girls Bathroom
Boys Room
N
W
E
S

TOPS 35500

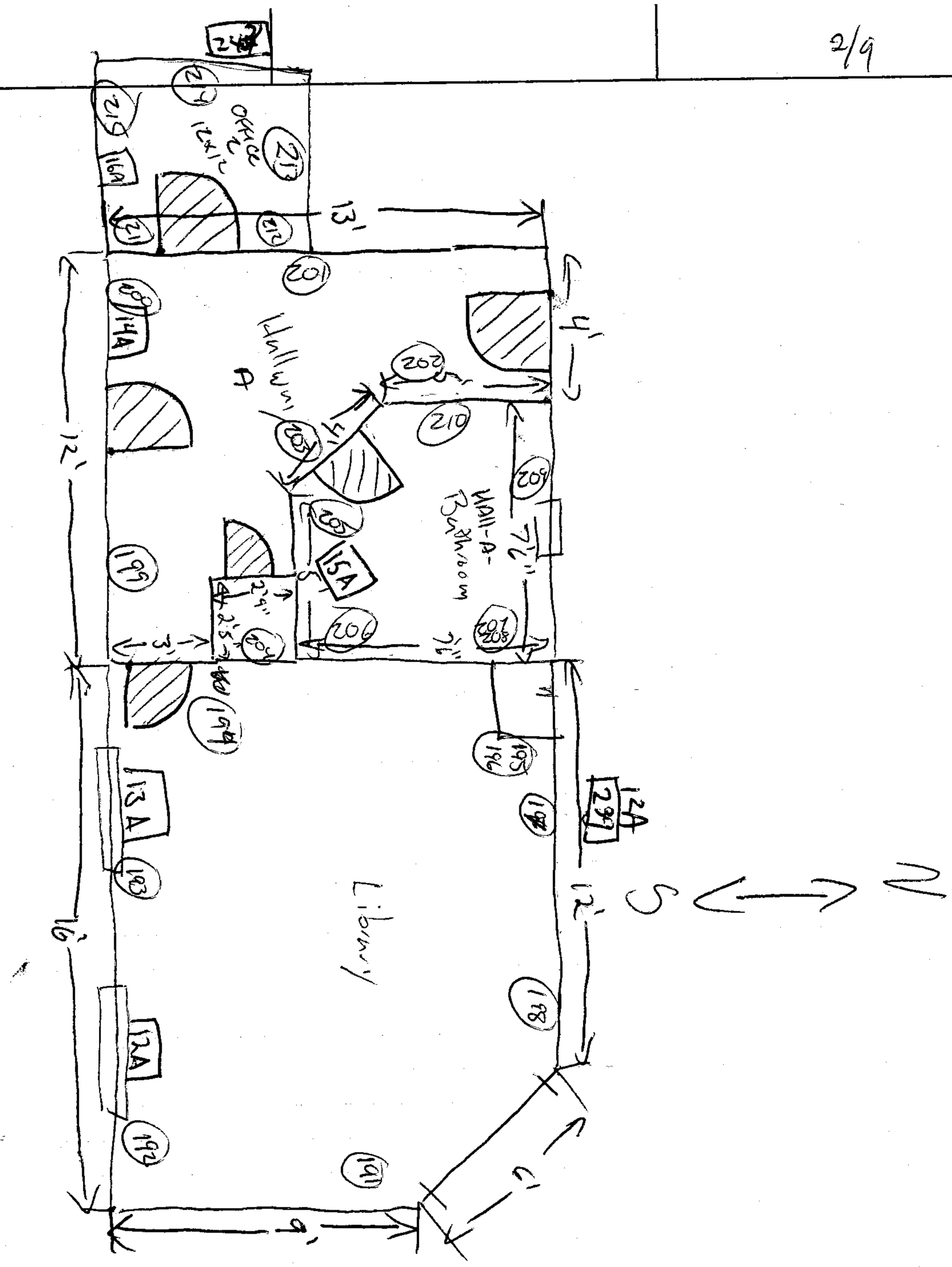
Office 2 12x12
Hallway A
Hall-A-Bathroom
Library
13'
4'
12'
16'
9'
6'
12'
S
N

TOPS. 35500

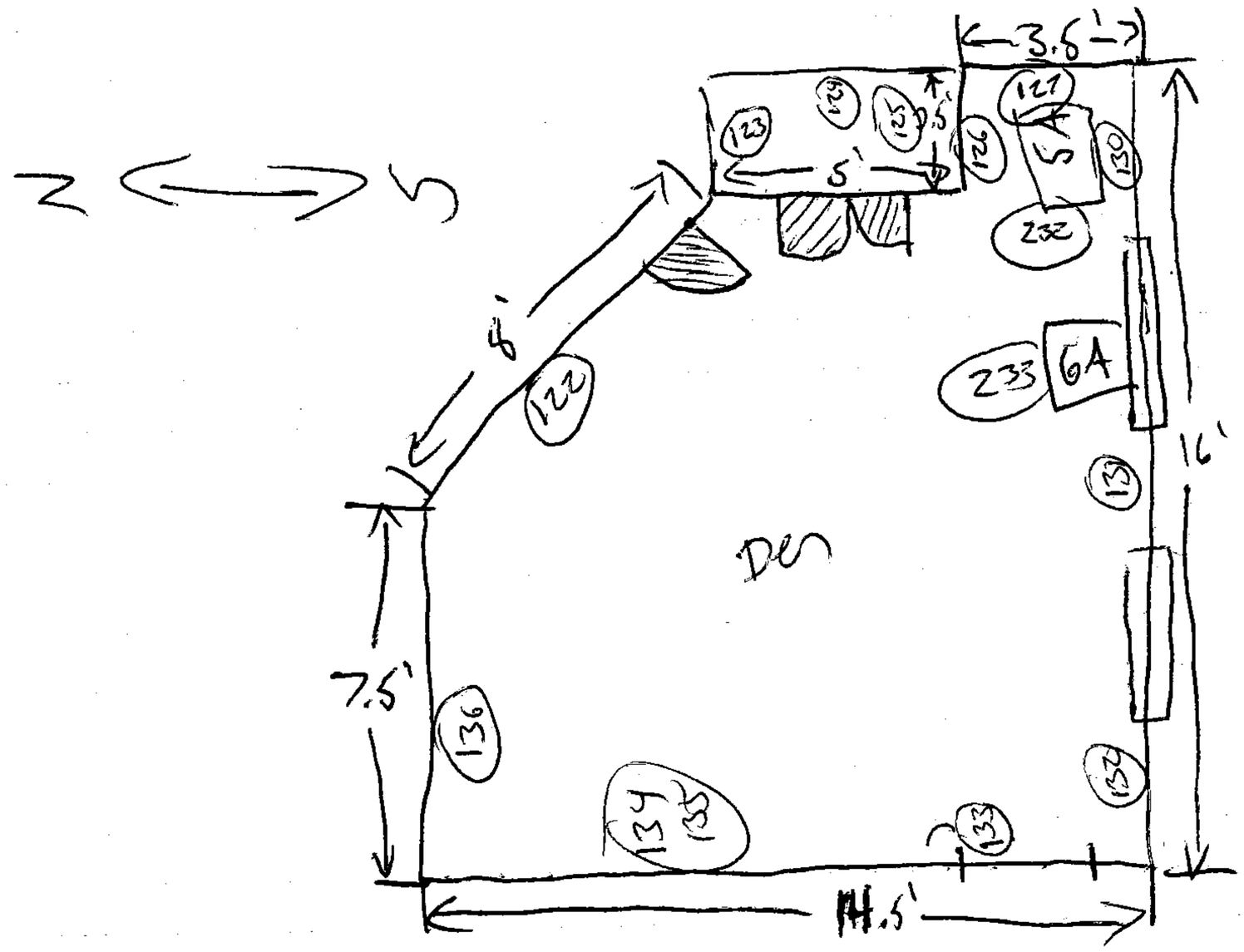

2nd Floor Den

(RAQUET STRINGER)

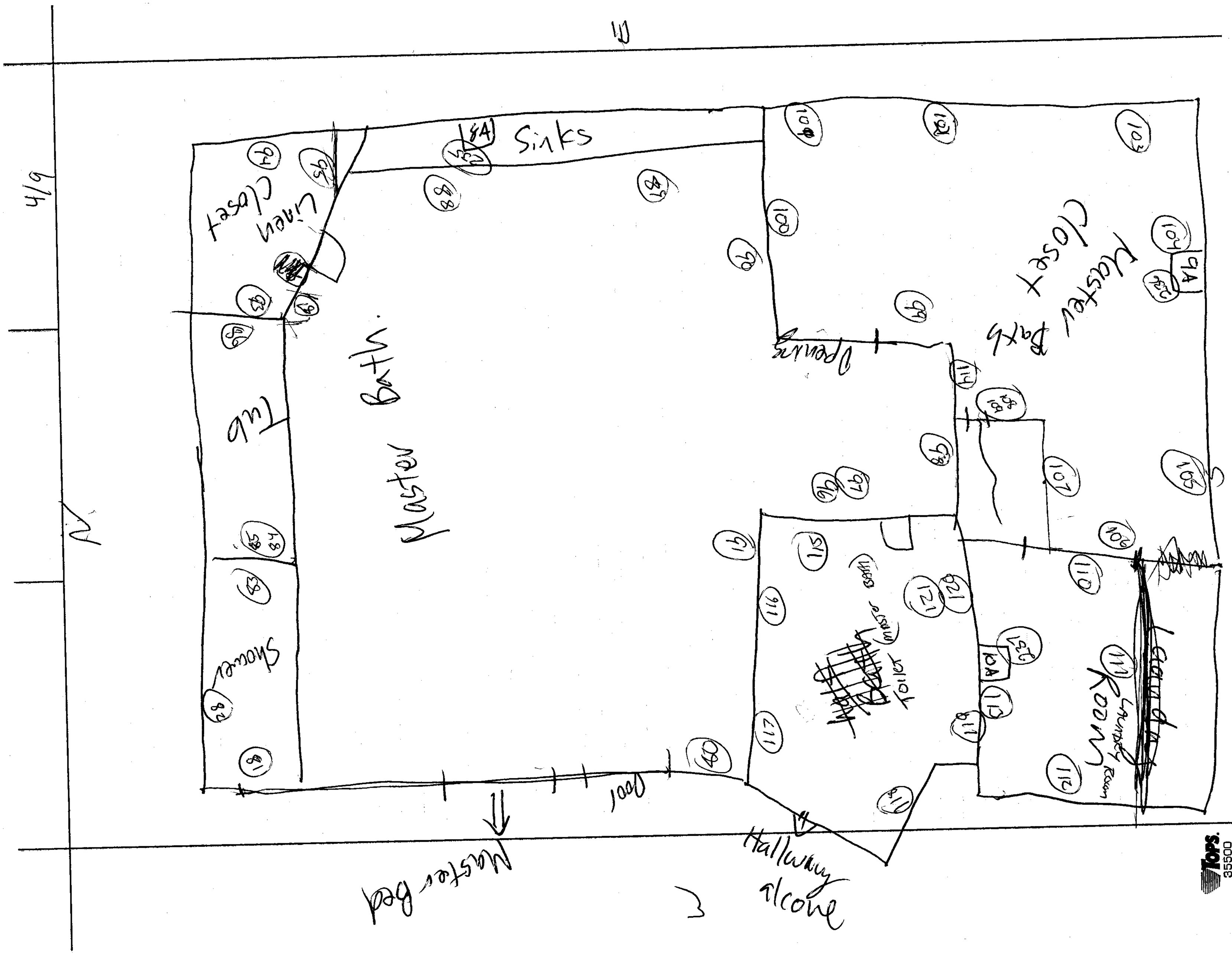

Sinks
Linen Closet
Master Bath
Tub
Shower
Master Bed
Hallway alcove
Master Bath Closet
Opening
Toilet
Master Bath
Laundry Room
Laundry Room
Door
4/9

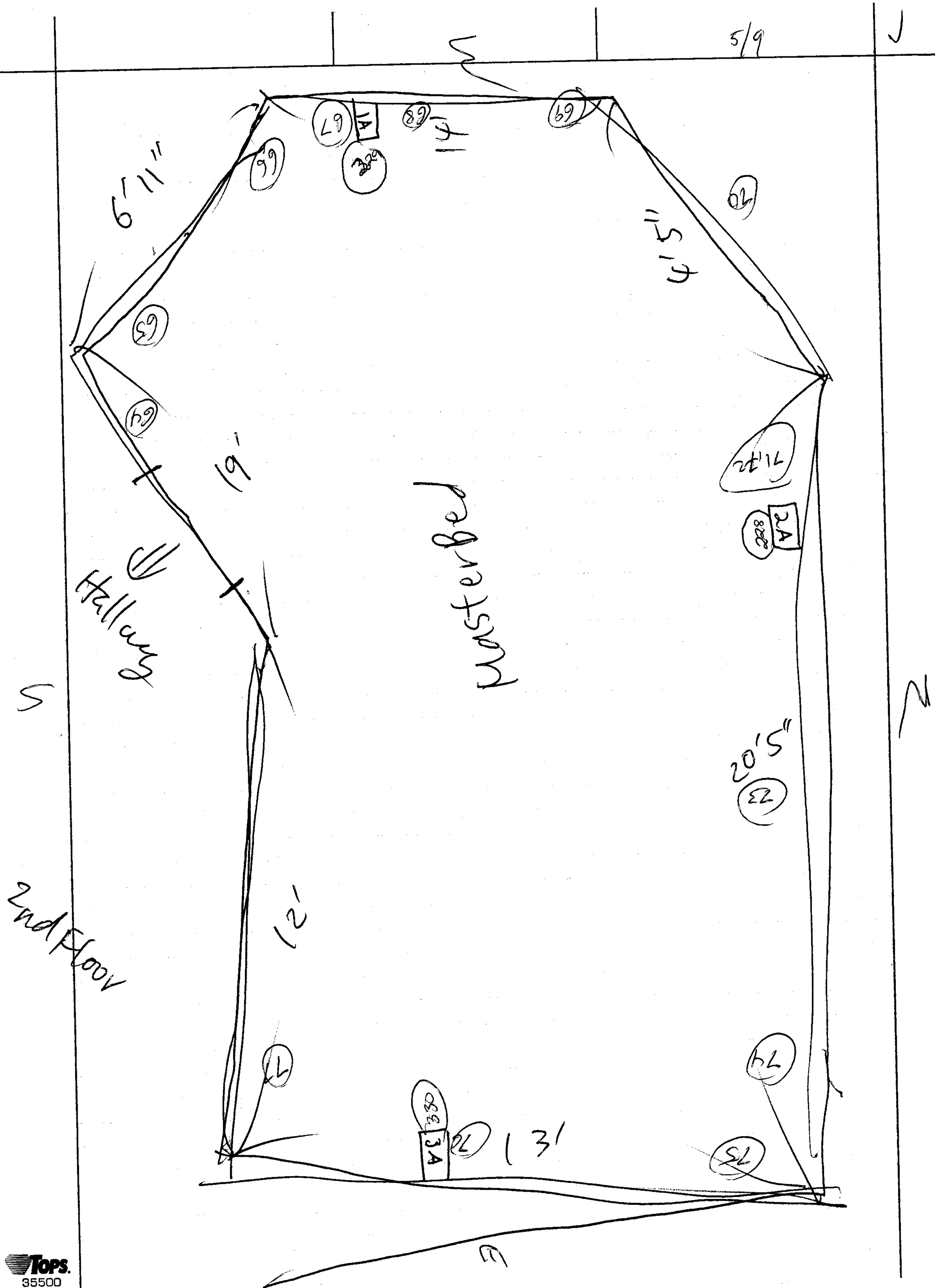
5/9
S
6'11"
19'
Hallway
2nd Floor
Westerberg
4'5"
20'5"
12'
13'
N
W
S
E
67
68
69
70
71
72
73
74
75
76
77
78
79
80
2A
3A
4A

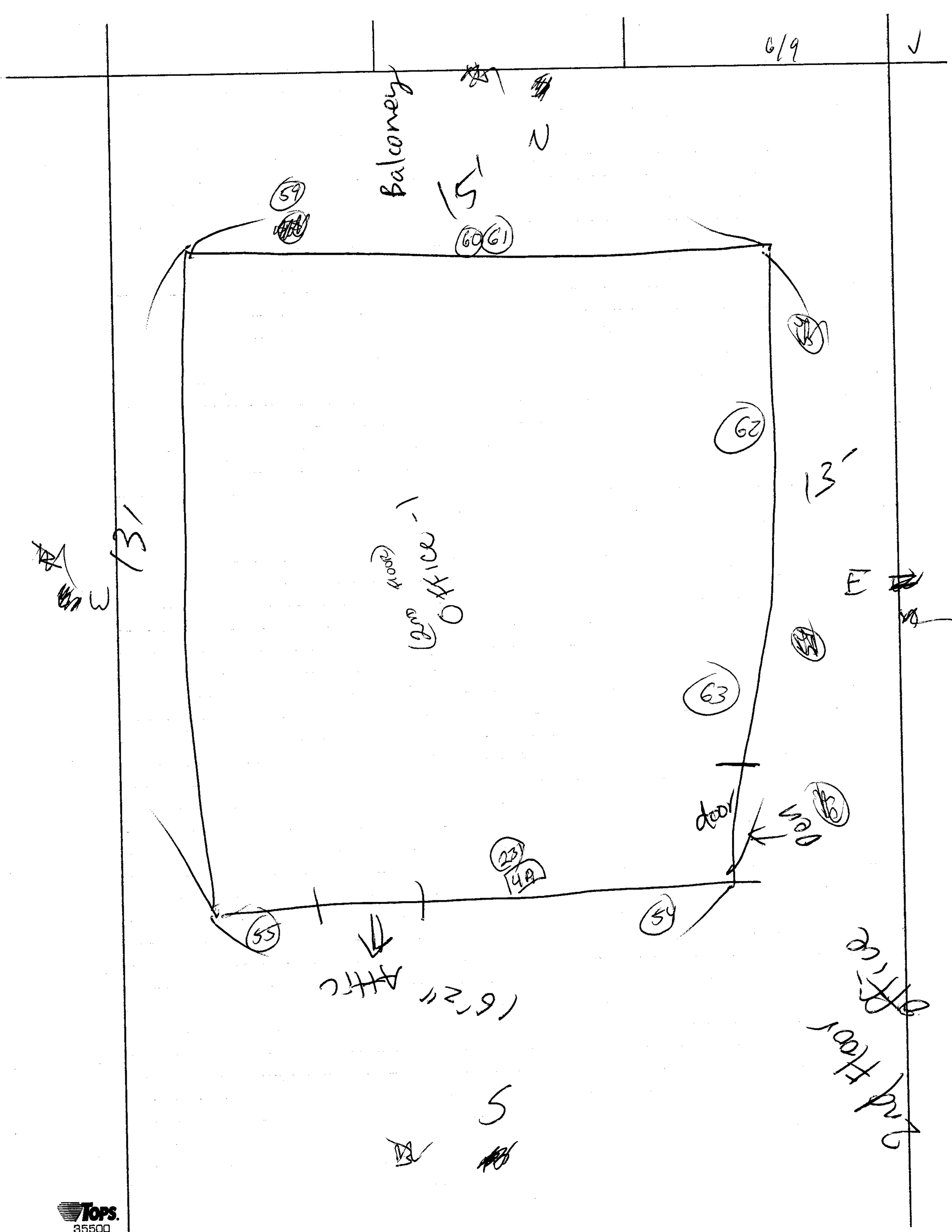
6/9
Balcony
N
15'
59
60
61
62
13'
E
63
door
23
4A
55
54
W
13'
door
office
door
S
Front Door
entrance

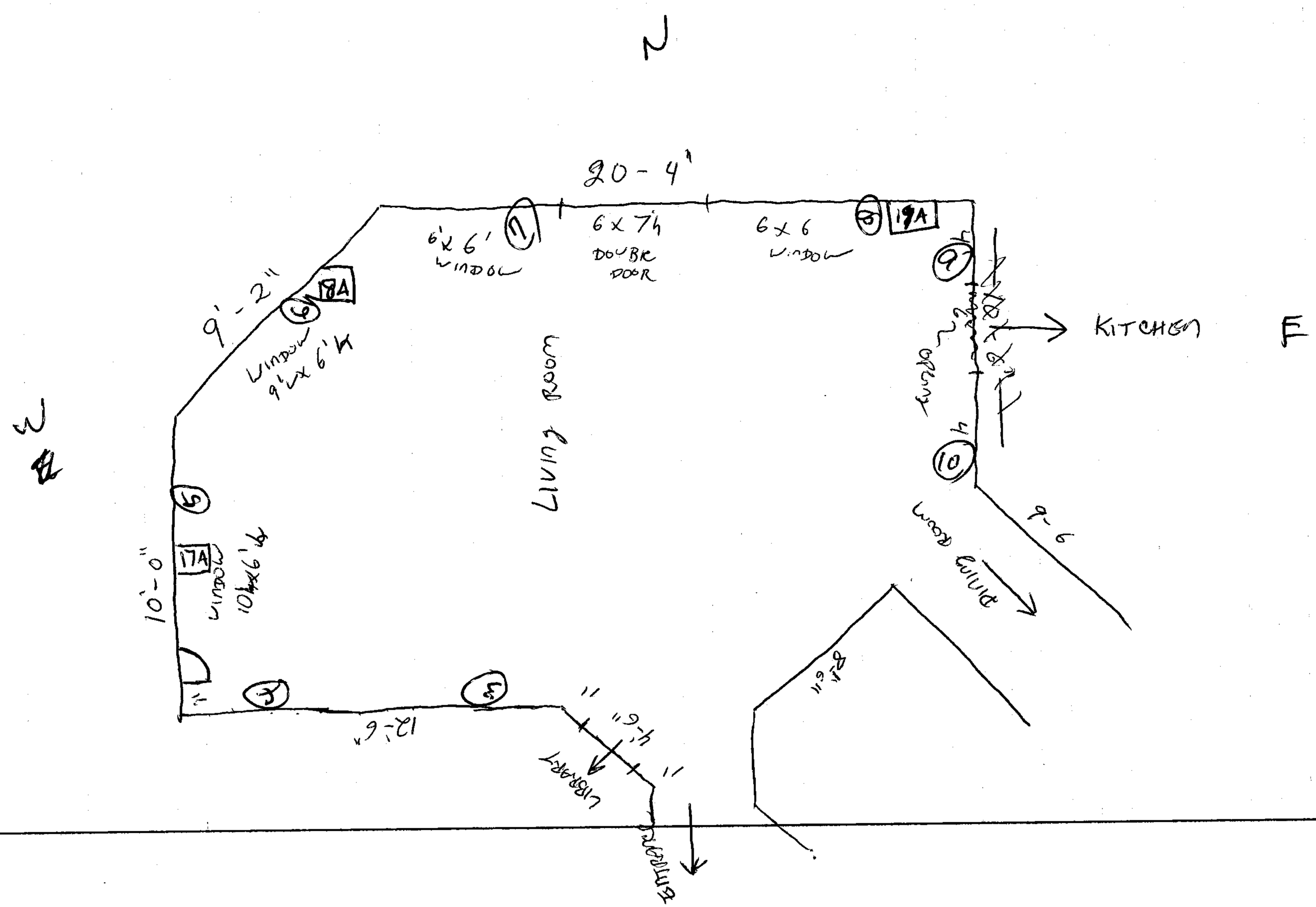
N
20 - 4"
6'x 6' WINDOW
6 x 7h DOUBLE DOOR
6 x 6 WINDOW
19A
18A
9' - 2"
WINDOW 9'x 6'K
KITCHEN
F
W
LIVING ROOM
10'-0"
17A
WINDOW 10'x 6'K
9-6
DINING ROOM
12'-6"
4'-6"
LIBRARY
ENTRANCE
S

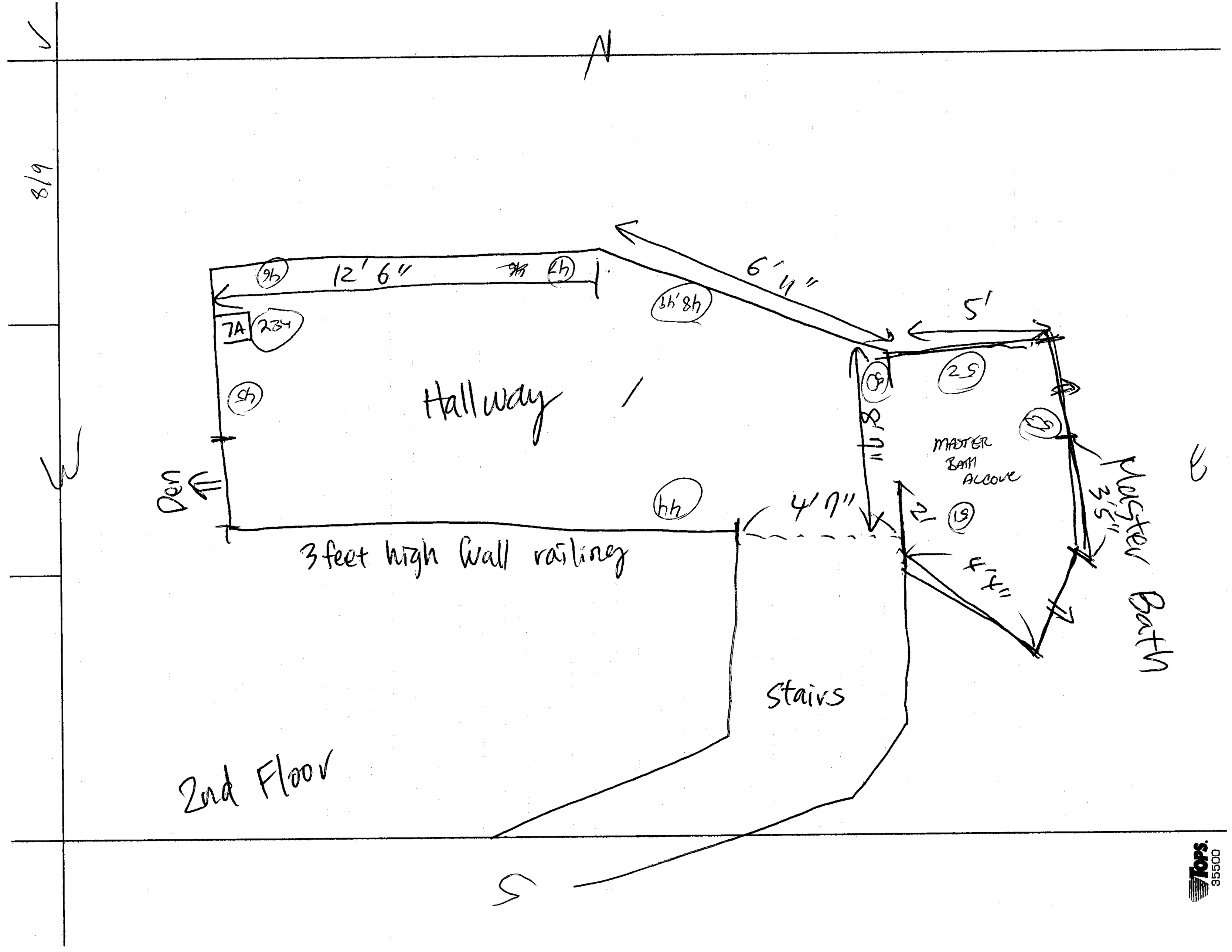
N
W
E
S
8/9
12' 6"
6' 4"
5'
7A
234
Hallway
Den
3 feet high wall railing
4' 7"
2'
4' 4"
MASTER BATH ALCOVE
Master Bath
3' 5"
Stairs
2nd Floor

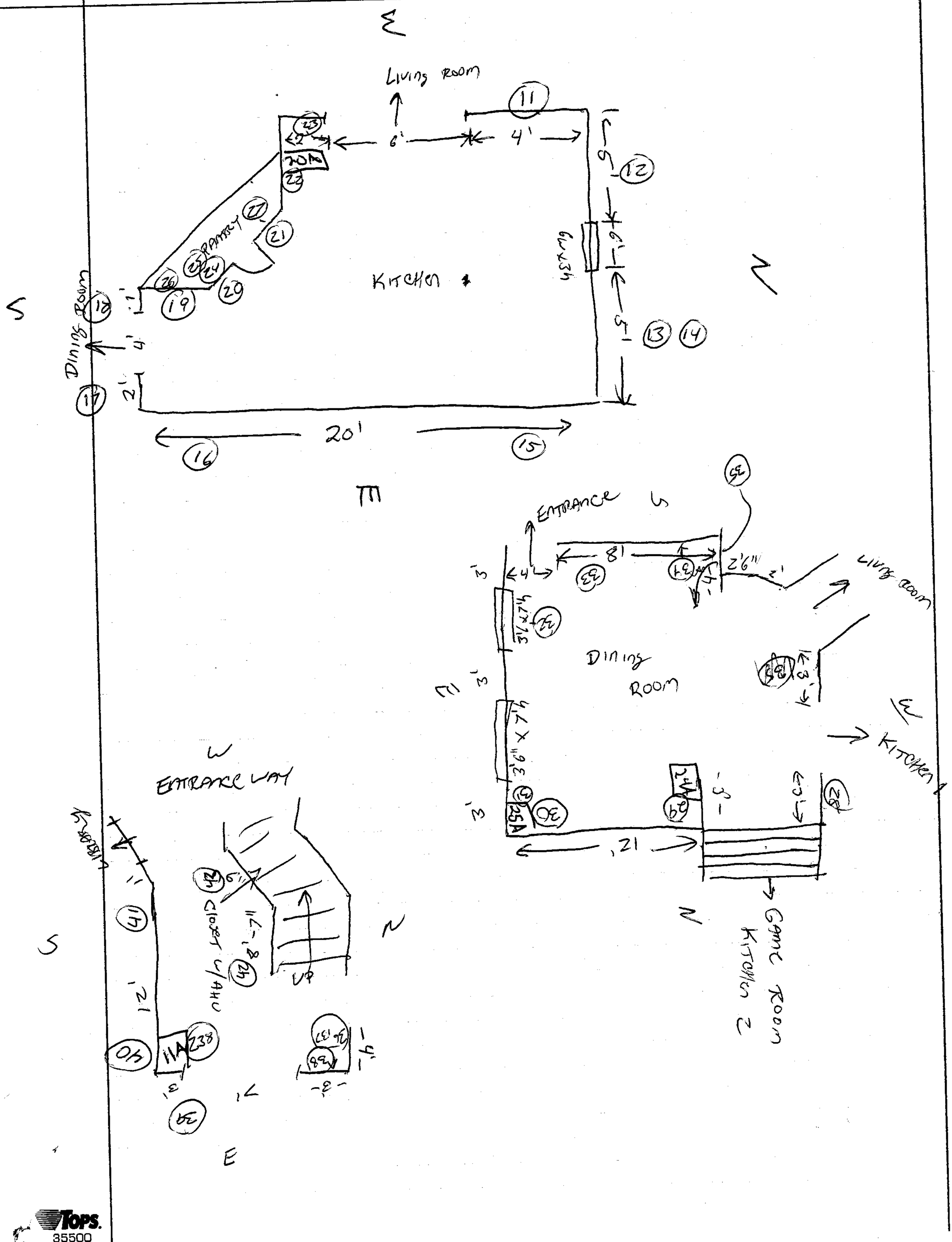
E
Living Room
11
6'
4'
12
6'
6'
13
14
Kitchen
Dining Room
18
17
20'
16
15
S
N
Entrance
8'
4'
2'6"
Living Room
Dining Room
Kitchen 1
Entrance Way
Closet w/ AHU
Game Room
Kitchen 2
S
N
E

TOPS. 35500

Environmental Health & Engineering, Inc.
117 Fourth Avenue, Needham, MA 02494
TEL: (781) 247-4300
FAX: (781) 247-4305

VOC SAMPI FIELD DATA

Page 1 / 1

Client: CPSC

Home Address: (b)(6) VIRGINIA BEACH VA

Date: 8-31

Field Person(s): TXM, BRM, N E

Project#: 1651C

SAMPLE ID	CANISTER ID	FLOW CONTROL ID	GAUGE ID	FLOOR	LOCATION	SAMPLE TYPE	GAUGE PRESSURE START	START TIME	GUAGE PRESSURE END	END TIME	NOTES
102648	AC 01604	FC00421	AVG 00988	1	Living	S	28	10:25	0	12:30	120 mins
102649	AC 01029	FC 00319	AVG 00875	1	Living	D	26	10:25	0	↓	↓
102650	AC 01438	FC 00196	AVG 01151	2	Master Bed	S		10:25	0		
102651	AC 01203	FC 00419	AVG 00561	2	Office	S		10:25	0		
102652	AC 00112	FC 00611	AVG 00522	G	Outdoor	S		10:30	0		

SAMPLE TYPES: S = Sample, D = Duplicate, FB = Field Blank, MB = Media Blank

/

ACTIVE SAM. _E FIELD DATA

Environmental Health & Engineering, Inc.
117 Fourth Avenue, Needham, MA 02494
TEL: (781) 247-4300
FAX: (781) 247-4305

Client: CPSC

Home Addres (b)(6) Virginia Beach

Field Person(s): TXM, BRH, NSE

Date: 08/31/09

Project#: 1657A

ROTA ID #: TR06

SAMPLE ID	FLOOR	LOCATION	TARGET ANALYTE	SAMPLE TYPE	PUMP ID	ROTA READ START	START TIME	ROTA READ END	END TIME	SAMPLE DURATION (MINS)	NOTES
102633	1	Great Room	Organic Acids	S	G10	.50	10:20	.43	1:45	210	
102634	1	Great Room		D	G16	.51		.45		210	
102635	2	Master Bedroom		S	11932	.49		.42	~~212~~	212	
102636	2	Office		S	15651	.51		.48		213	
102637	1	Outside		S	G04	.51		.52		211	raining, ~~[illegible]~~ wet sample
102638	1	Great Room	Inorganic Acids	S	G06	.51		.46		210	
102639	1	Great Room		D	09811	.51		.42		210	
102640	2	Master Bedroom		S	03211	.50		.48	~~212~~	212	
102641	2	Office		S	05033	.51		.45		213	
102642	1	Outside		S	14320	.49		.45		211	raining, wet sample
102643	1	Great Room	Aldehydes	S	07646	.51		.49		210	
102644	1	Great Room		D	G04	.50		.51		210	
102645	2	Master Bedroom		S	A01091	.49		.46		212	
102646	2	Office		S	07439	.49		.41		213	
102647	1	Outside		S		.49		.46		211	raining, wet sample

SAMPLE TYPES: S = Sample, D = Duplicate, FB = Field Blank, MB = Media Blank

~~ACTIVE~~ SAMPLE FIELD DATA

Tedlar Bags

Page 1 of 1

Environmental Health & Engineering, Inc.
117 Fourth Avenue, Needham, MA 02494
TEL: (781) 247-4300
FAX: (781) 247-4305

Client: CPSC

Home Address: (b)(6) [redacted] ginia Beach VA

Field Person(s): TXM, BRH, NSE

Date: ~~08/31/09~~ 9/2/09

Project#: 16512

ROTA ID #:

SAMPLE ID	FLOOR	LOCATION	TARGET ANALYTE	SAMPLE TYPE	PUMP ID	ROTA READ START	START TIME	ROTA READ END	END TIME	SAMPLE DURATION (MINS)	NOTES
102947 ~~102653~~	1	Great Room	Red Sulfur	S		09/02/09	5:20				
102948	1	OUTSIDE	↓	S		↓	↓				
102949	1	MASTER BED	↓	S		↓	↓				
102950	1	OFFICE	↓	S		↓	↓				
102951	1	GREAT ROOM	↓	D		↓	↓				

SAMPLE TYPES: S = Sample, D = Duplicate, FB = Field Blank, MB = Media Blank

XRF SCA[illegible] FIELD DATA

Environmental Health & Engineering, Inc.
117 Fourth Avenue, Needham, MA 02494
TEL: (781) 247-4300
FAX: (781) 247-4305

Client: CPSC

Home Address: (b)(6) [illegible]GINIA BEACH VA

Field Person(s): TXM, BRH, NSE

Date: 08/3/09
Project#: 16572

XRF Serial #: 10755
XRF Scan Time 20sec

LOCATION ID	FLOOR	LOCATION	WALL COOR.	SAMPLE LOCATION	SURFACE TYPE	Wall ID	SAMPLE TYPE	SAMPLE SIZE	TIME	XRF Reading	NOTES
3	1	Living	S	2	TEXTURED	LR1	S	Bulk	11:45	486	
4	1			6	"				11:51	464	
					"						
5	1	outlet	W	18"	"	LR2	S		11:52	456	
6	1	outlet	N	18"	"	LR3			11:53	435	
7	1	outlet	N	18"	"	LR4			11:54	398	
8	1	outlet	N	18"	"	LR5			11:56	485	
9	1	switch	E	4	"	LR6			11:58	443	
10	1		E	6	"	LR6			11:59	428	
11	1	KITCHEN WALL	E	4' FROM FLOOR	TEXTURED	K1	S		12:06	376	
12	1	KITCHEN SWITCH	N	"	OUTLET TILE	K2	S		12:08	101	
13	1	" "	N	"	" TILE	K3	S		12:09	114	
14	1	" "	N	"	" TILE	K3	D		12:09	100	
15	1	" WALL	E	"	TILE	K4	S		12:10	124	
16	1	" WALL	E	"	TILE	K4	S		12:11	48	
17	1	" SWITCH	S	"	TEXTURED	K5	S		12:12	346	
18	1	" WALL	S	6' "	TEXT	K5	S		12:15	391	
19	1	" WALL	W	3' "	TEXT	K6	S		12:16	351	
20	1	" WALL	S	6' "	TEXT	K7	S		12:20	421	

SAMPLE TYPES: S = Sample, D = Duplicate, FB = Field Blank, MB = Media Blank

XRF SCAN FIELD DATA

Environmental Health & Engineering, Inc.
117 Fourth Avenue, Needham, MA 02494
TEL: (781) 247-4300
FAX: (781) 247-4305

Client: CPSC

Home Address: (b)(6)

Field Person(s): BRH TXM NSE

Date: 8-31-09
Project#: 16512

XRF Serial #: 10755
XRF Scan Time 20 sec

LOCATION ID	FLOOR	LOCATION	WALL COOR.	SAMPLE LOCATION	SURFACE TYPE	Wall ID	SAMPLE TYPE	SAMPLE SIZE	TIME	XRF Reading	NOTES
21	1	KITCHEN WALL	S	2' FROM FLOOR	TEXT	K7	S		12:21	393	
22	1	KITCHEN WALL	S	6' "	TEXT	K8	S		12:22	390	
23	1	KITCHEN WALL	S	4' "	TEXT	K9	S		12:22	363	
24	1	PANTRY SWITCH	N	4' "	TEXT	K-P1	S		12:23	421	
25	1	" "	N	4' "	TEXT	K-P1	D		12:25	372	
26	1	" "	E	2' "	TEXT	K-P2	S		12:26	429	
27	1	" "	N	2' "	"	K-P3	S		12:26	520	
28	1	DINING ROOM	N	6' "	"	D1	S		12:29	417	
29	1	" "	E	2' "	"	D2	S		12:30	483	
30	1	" "	E	6' "	"	D2	S		12:30	354	
31	1	" "	S	2' "	"	D3	S		12:31	414	
32	1	" " OUTLET	S	1' "	"	D3	S		12:32	409	
33	1	" " SWITCH	W	4' "	"	D4	S		12:32	407	
34	1	" " —	W	6' "	"	D4	S		12:33	363	
35	1	" "	N	2' "	"	~~D4~~ D1	S		12:34	407	
36	1	ENTRANCE WAY	N	2' "	"	EW-1	S		12:36	335	
37	1	" "	N	2' "	"	EW-1	D		12:37	378	
38	1	" "	E	6' "	"	EW-2	S		12:38	390	
39	1	" " SWITCH	E	4' "	"	EW-2	S		12:38	443	

SAMPLE TYPES: S = Sample, D = Duplicate, FB = Field Blank, MB = Media Blank

XRF SCAN FIELD DATA

Environmental Health & Engineering, Inc.
117 Fourth Avenue, Needham, MA 02494
TEL: (781) 247-4300
FAX: (781) 247-4305

Client: CPSC

Home Address: (b)(6)

Field Person(s): TXM NSE BRM

Date: 8-31-09
Project#: 16512

XRF Serial #: 10755
XRF Scan Time 20 SEC

LOCATION ID	FLOOR	LOCATION	WALL COOR.	SAMPLE LOCATION	SURFACE TYPE	Wall ID	SAMPLE TYPE	SAMPLE SIZE	TIME	XRF Reading	NOTES
40	1	ENTRANCE WAY	S	6' FROM FLOOR	TRIM	EW-3	S		12:40	458	
41	1	" "	S	2' "	"	EW-3	S		12:40	368	
42	~~2~~ 1	" "	N	6' "	"	EW-4	S		12:41	346	
43	1	" "	N	6' "	"	EW-5	S		12:44	370	
44	2	HALLWAY 1	S	2' "	"	HW-1	S		12:49	401	
45	2	" " SWITCH	W	4' "	"	HW-2	S		12:50	383	
46	2	" " —	N	2' "	"	HW-3	S		12:51	361	
47	2	" " —	N	6' "	"	HW-3	S		12:52	394	
48	2	" "	N	2' "	"	HW-4	S		12:53	403	
49	2	" "	N	2' "	"	HW-4	D		12:54	388	
50	2	" "	N	6' "	"	HW-5	S		12:54	370	
51	2	MASTER BATH ALCOVE	W	6' "	"	MBA-1	S		12:57	335	
52	2	" " "	N	2' "	"	MBA-2	S		12:57	359	
53	2	" " "	~~W~~ E	6' "	"	MBA-3	S		12:58	314	
54	2	OFFICE 1	~~W~~ S	2' "	"	O-1	S		1:01	~~407~~ 433	
55	2	"	~~W~~ S	6' "	"	O-1	S		1:01	359	
56	2	"	~~E~~ W	6' "	"	O-2	S		1:03	354	
57	2	"	~~E~~ W	2' "	"	O-2	S		1:04	302	
~~58~~ 59	2	" OUTLET	~~S~~ N	2' "	"	O-3	S		1:05	145	

SAMPLE TYPES: S = Sample, D = Duplicate, FB = Field Blank, MB = Media Blank

XRF SCA. .FIELD DATA

Environmental Health & Engineering, Inc.
117 Fourth Avenue, Needham, MA 02494
TEL: (781) 247-4300
FAX: (781) 247-4305

Client: CPSC

Home Address: (b)(6)

Field Person(s): TXM BRM NSE

Date: 8-31-09
Project#: 16512

XRF Serial #: 10755
XRF Scan Time 20 sec

LOCATION ID	FLOOR	LOCATION	WALL COOR.	SAMPLE LOCATION	SURFACE TYPE	Wall ID	SAMPLE TYPE	SAMPLE SIZE	TIME	XRF Reading	NOTES
60	2	OFFICE 1	N	6'	TEXT	O-3	S		1:07	394	
61	2	" "	N	6'	TEXT	O-3	D		1:08	386	
62	2	" "	N	2'	TEXT	O-4	S		1:09	390	
63	2	" "	N	4'	"	O-4	S		1:10	407	
64	2	MASTER BEDROOM	S	6'	"	MB-1	S		1:12	367	
65	2	" "	S	2'	"	MB-2	S		1:13	370	
66	2	" "	S	6'	"	MB-2	S		1:13	359	
67	2	" "	W	18" OUTLET	"	MB-3	S		1:14	383	
68	2	" "	W	6'	"	MB-3	S		1:15	406	
69	2	" "	W	2'	"	MB-3	S		1:16	367	
70	2	" "	N	18" OUTLET	"	MB-4	S		1:17	419	
71	2	" "	N	6'	"	MB-5	S		1:17	364	
72	2	" "	N	6'	"	MB-5	D		1:18	365	
73	2	" "	N	2'	"	MB-5	S		1:19	364	
74	2	" "	N	4'	"	MB-5	S		1:20	346	
75	2	" "	E	6'	"	MB-6	S		1:20	372	
76	2	" "	E	2'	"	MB-6	S		1:21	374	
77	2	" "	S	6'	"	MB-7	S		1:22	397	
78	2	" "	S	2'	"	MB-7	S		1:22	385	

SAMPLE TYPES: S = Sample, D = Duplicate, FB = Field Blank, MB = Media Blank

XRF SCA. .FIELD DATA

Environmental Health & Engineering, Inc.
117 Fourth Avenue, Needham, MA 02494
TEL: (781) 247-4300
FAX: (781) 247-4305

Client: CPSC

Home Address: (b)(6)

Field Person(s): TXM BRH NSE

Date: 8-31-09
Project#: 16512

XRF Serial #: 10755
XRF Scan Time 20 SEC

LOCATION ID	FLOOR	LOCATION	WALL COOR.	SAMPLE LOCATION	SURFACE TYPE	Wall ID	SAMPLE TYPE	SAMPLE SIZE	TIME	XRF Reading	NOTES
79	2	MASTER BEDROOM	S	4'	TEXT	MB-1	S		1:23	441	
80	2	MASTER BATHROOM (~~Shower~~)	W	4' OUTLET	TEXT	MBSH-1	S		1:28	414	
81	2	" " (Shower)	W	6'	TILE	MBSH-1	S		1:30	100	
82	2	" " "	N	2'	"	MBSH-2	S		1:30	104	
83	2	" " "	E	6'	"	MBSH-3	S		1:31	126	
84	2	" " TUB SIDE	W	6'	TEXT	MBSH-4	~~D~~ S		1:32	368	
85	2	" " TUB SIDE	W	6'	"	"	D		1:33	353	
86	2	" "	E	2'	"	MBSH-5	S		1:33	374	
87	2	" "	N	6'	"	MBSH-6	S		1:34	390	
88	2	" "	E	4' OUTLET	"	MBSH-7	S		1:35	352	
89	2	" "	E	6'	"	MBSH-7	S		1:36	436	
90	2	" "	S	4' SWITCH	"	MBSH-8	S		1:37	374	
91	2	" "	S	6'	"	MBSH-9	S		1:43	398	
93	2	" " Linen Closet	W	4' SWITCH	"	MB Closet-1	S		2:56	393	
94	2	" " "	E	2'	"	" " -2	S		2:56	434	
95	2	" " "	S	6'	"	" " -3	S		2:57	345	
96	2	" " Opening	W	2'	"	MBO-1	S		2:58	421	
97	2	" " "	W	2'	"	MBO-1	~~S~~ D		2:59	462	
98	2	" " "	S	6'	"	MBO-2	S		2:59	389	

SAMPLE TYPES: S = Sample, D = Duplicate, FB = Field Blank, MB = Media Blank

XRF SCAN FIELD DATA

6/13

Environmental Health & Engineering, Inc.
117 Fourth Avenue, Needham, MA 02494
TEL: (781) 247-4300
FAX: (781) 247-4305

Client: CPSC

Home Address: (b)(6)

Field Person(s): NSE BRH TXM

Date: 8-31-09
Project#: 16512

XRF Serial #: 10755
XRF Scan Time 20 sec

LOCATION ID	FLOOR	LOCATION	WALL COOR.	SAMPLE LOCATION	SURFACE TYPE	Wall ID	SAMPLE TYPE	SAMPLE SIZE	TIME	XRF Reading	NOTES
99	2	MASTER BATH OPENING	E	2'	TEXT	MBO-3	S		3:00	433	
100	2	MASTER BATH CLOSET	N	6'	"	MBC-1	S		3:01	354	
101	2	" " "	E	2'	"	MBC-2	S		3:02	326	
102	2	" " "	E	6'	"	"	S		3:03	368	
103	2	" " "	E	2'	"	"	S		304	410	
104	2	" " "	S	18' OUTLET	"	MBC-3	S		3:05	442	
105	2	" " "	S	6'	"	MBC-3	S		305	411	
106	2	" " "	W	2'	"	MBC-4	S		3:06	399	
107	2	" " "	N	6'	"	MBC-5	S		3:11	411	
108	2	" " "	W	18'	"	MBC-6	S		3:12	380	
109	2	" " "	W	18'	"	MBC-6	D		313	379	
110	2	LAUNDRY ROOM	E	4'	"	L-1	S		3:15	411	
111	2	" "	S	2'	"	L-2	S		3:16	390	
112	2	" "	W	6'	"	L-3	S		3:16	391	
113	2	" "	N	2'	"	L-4	S		3:17	408	
114	2	MASTER BATH CLOSET	N	6'	"	MBC-7	S		3:18	345	
115	2	TOILET (MASTER BATH)	E	2'	"	T-1	S		3:21	372	
116	2	"	N	6'	"	T-2	S		3:21	406	
117	2	"	N	4' SWITCH	"	T-2	S		3:22	3:55	

SAMPLE TYPES: S = Sample, D = Duplicate, FB = Field Blank, MB = Media Blank

XRF SCAN FIELD DATA

Environmental Health & Engineering, Inc.
117 Fourth Avenue, Needham, MA 02494
TEL: (781) 247-4300
FAX: (781) 247-4305

Client: CPSC

Home Address: (b)(6)

Field Person(s): TXM NSE BRH

Date: 8-31-09
Project#: 16512

XRF Serial #: 10755
XRF Scan Time 20 SEC

LOCATION ID	FLOOR	LOCATION	WALL COOR.	SAMPLE LOCATION	SURFACE TYPE	Wall ID	SAMPLE TYPE	SAMPLE SIZE	TIME	XRF Reading	NOTES
118	2	Toilet (master BATH)	S	2'	TOT	T-3	S		3:23	414	
119	"	"	S	6'	"	T-4	S		3:24	367	
120	"	"	S	4' SWITCH	"	T-4	S		3:25	363	
121	"	"	S	4' "	"	T-4	D		3:26	365	
122	"	Den (RAQUET STRINGS)	N	4' "	"	D-1	S		3:28	336	
123	"	DEN CLOSET	N	2'	"	DC-1	S		3:29	396	
124	"	" "	E	6'	"	DC-2	S		3:29	370	
125	"	" "	S	2'	"	DC-3	S		3:30	396	
126	"	Den —	N	6'	"	D-2	S		3:31	391	
127	"	"	E	18" OUTLET	"	D-3	S		3:32	358	
130	"	"	S	6'	"	D-4	S		3:36	400	
131	"	"	S	18" OUTLET	"	D-4	S		3:37	406	
132	"	"	S	6'	"	D-4	S		3:38	385	
133	"	"	W	4' SWITCH	"	D-5	S		3:39	361	
134	"	"	W	2'	"	D-5	S		3:39	385	
135	"	"	W	"	"	D-5	D		3:40	394	
136	"	"	N	6'	"	D-6	S		3:41	366	
137	1	STEPS - 1	S	6'	PAINT	S-1	S		3:44	1964	
138	1	GUEST Living Room	W	2	"	GLR-1	S		3:46	23	

SAMPLE TYPES: S = Sample, D = Duplicate, FB = Field Blank, MB = Media Blank

XRF SCA FIELD DATA

Environmental Health & Engineering, Inc.
117 Fourth Avenue, Needham, MA 02494
TEL: (781) 247-4300
FAX: (781) 247-4305

Client: CPSC

Home Address: (b)(6)

Field Person(s): BRH TXM NSE

Date: 8-31-09
Project#: 16512

XRF Serial #: 10755
XRF Scan Time 20 SEC

LOCATION ID	FLOOR	LOCATION	WALL COOR.	SAMPLE LOCATION	SURFACE TYPE	Wall ID	SAMPLE TYPE	SAMPLE SIZE	TIME	XRF Reading	NOTES
139	1	Guest Living Room	W	5'	PAINT	GLR-1	S		3:47	1764	
140	1	" " "	S	6'	WOOD	GLR-2	S		3:49	32	
141	1	" " "	E	6'	PAINT	GLR-3	S		3:49	1425	
142	1	" " "	E	2'	"	"	S		3:50	1491	
143	1	" " "	E	6'	"	"	S		3:51	1474	
144	1	" " "	E	2'	"	"	S		3:52	1387	
145	1	" Kitchen	E	4' OUTLET	"	GK-1	S		3:53	1328	
146	1	" "	N	6'	"	GK-2	S		3:53	1346	
147	1	" "	N	4' OUTLET	FORMICA	"	S		3:55	22	
148	1	" "	W	2'	PAINT	GK-3	S		3:55	1703	
149	1	" "	W	2'	"	"	D		3:56	1858	
150	1	Kitchen Vestibule	W	4' SWITCH	"	KV-1	S		3:57	1595	
151	1	Kitchen Vestibule	N	6'	"	KV-2	S		3:58	1396	
152	1	" " Closet	N	2'	"	KVC-1	S		3:59	3254	
153	1	" " "	W	5'	"	KVC-2	S		4:00	3216	
154	1	Kitchen Vestibule	E	2'	"	KV-3	S		4:01	1600	
155	1	" "	S	6'	"	KV-4	S		4:02	1154	
156	1	" "	W	2'	"	KV-1	S		4:03	1198	
157	1	Bedroom 1	W	6'	"	BR-1	S		4:04	69	

SAMPLE TYPES: S = Sample, D = Duplicate, FB = Field Blank, MB = Media Blank

XRF SCA FIELD DATA

9/13

Environmental Health & Engineering, Inc.
117 Fourth Avenue, Needham, MA 02494
TEL: (781) 247-4300
FAX: (781) 247-4305

Client: CPSC

Home Address: (b)(6)

Field Person(s): BRM TXM NSE

Date: 8-31-09
Project#: 16512

XRF Serial #: 10755
XRF Scan Time 20 SEC

LOCATION ID	FLOOR	LOCATION	WALL COOR.	SAMPLE LOCATION	SURFACE TYPE	Wall ID	SAMPLE TYPE	SAMPLE SIZE	TIME	XRF Reading	NOTES
158	1	Bedroom 1	S	6'	PAINT	BR-2	S		4:07	97	
159	1	" "	S	2'	"	BR-2	S		4:08	102	
160	1	" "	E	6'	"	BR-3	S		4:08	60	
161	1	" "	E	6'	"	BR-3	D		4:09	69	
162	1	" "	N	2'	"	BR-4	S		4:10	63	
163	1	" "	N	4' SWITCH	"	BR-4	S		4:11	90	
164	1	GIRLS BATH	S	4' "	"	GB-1	S		4:12	1601	
165	1	" "	E	6'	"	GB-2	S		4:12	2231	
166	1	" "	E	6'	"	GB-2	S		4:13	3983	
167	1	" "	N	4'	"	GB-3	S		4:14	1610	
168	1	" "	W	6'	"	GB-4	S		4:15	4359	
169	1	BOYS ROOM	S	4' SWITCH	"	BOY-1	S		4:17	122	
170	1	" "	S	6'	"	BOY-1	S		4:18	42	
171	1	" "	S	6'	"	BOY-1	D		4:19	78	
172	1	" "	E	2'	"	BOY-2	S		4:19	66	
173	1	" "	N	4'	"	BOY-3	S		4:20	110	
174	1	" "	W	2'	"	BOY-4	S		4:22	93	
175	1	BOYS CLOSET	W	4'	"	BOY CLOST	S		4:23	68	
176	1	BOYS ROOM	S	6'	"	BOY 5	S		4:24	89	

SAMPLE TYPES: S = Sample, D = Duplicate, FB = Field Blank, MB = Media Blank

XRF SCA FIELD DATA

10/13

Environmental Health & Engineering, Inc.
117 Fourth Avenue, Needham, MA 02494
TEL: (781) 247-4300
FAX: (781) 247-4305

Client: CPSC

Home Address: (b)(6)

Field Person(s): TXM NSE BRM

Date: 8-31-09
Project#: 16512

XRF Serial #: 10755
XRF Scan Time 20 SEC

LOCATION ID	FLOOR	LOCATION	WALL COOR.	SAMPLE LOCATION	SURFACE TYPE	Wall ID	SAMPLE TYPE	SAMPLE SIZE	TIME	XRF Reading	NOTES
177	1	BOYS ROOM	W	2'	PAINT	BOY 6	S		4:25	64	
178	1	BOYS ROOM HALLWAY	N	6'	"	BH-1	S		4:28	1170	
179	1	" "	S	4'	"	BH-2	S		4:28	1432	
180	1	BOYS BATHROOM	S	4' SWITCH	"	BBR-1	S		4:29	2254	
181	1	" "	W	7'	"	BBR 2	S		4:30	3215	
182	1	" "	N	6'	"	BBR-3	S		4:31	3698	
183	1	" "	N	6'	"	BBR-3	D		4:33	2671	
184	1	" "	E	4'	"	BBR-4	S		4:34	3622	
185	1	GUEST ROOM	W	4' SWITCH	"	GR-1	S		4:38	789	
186	1	GUEST CLOSET	W	6'	"	GRC-1	S		4:39	2586	
187	1	GUEST ROOM	W	2'	"	GR-1	S		4:40	794	
188	1	" "	N	6'	"	GR-2	S		4:42	68	
189	1	" "	E	2'	"	GR-3	S		4:44	814	
190	1	" "	S	6'	"	GR-4	S		4:47	76	
191	1	LIBRARY	E	6'	TEXT	L-1	S		4:51	438	
192	1	"	S	18" OUTLET	"	L-2	S		4:52	408	
193	1	"	S	" "	"	L-2	S		4:53	444	
194	1	"	W	4' SWITCH	"	L-3	S		4:54	441	
195	1	"	W	6'	"	L-4	S		4:55	391	

SAMPLE TYPES: S = Sample, D = Duplicate, FB = Field Blank, MB = Media Blank

XRF SCA[illegible] FIELD DATA

Page _ of ____

11/13

Environmental Health & Engineering, Inc.
117 Fourth Avenue, Needham, MA 02494
TEL: (781) 247-4300
FAX: (781) 247-4305

Client: CPSC

Home Address: (b)(6)

Field Person(s): TXM BRM NSE

Date: 8-31-09
Project#: 16512

XRF Serial #: 10755
XRF Scan Time 20 sec

LOCATION ID	FLOOR	LOCATION	WALL COOR.	SAMPLE LOCATION	SURFACE TYPE	Wall ID	SAMPLE TYPE	SAMPLE SIZE	TIME	XRF Reading	NOTES
196	1	LIBRARY	W	6'	TGT	L-4	D		4:55	363	
197	1	"	N	2'	"	L-5	S		4:56	455	
198	1	"	N	6'	"	"	S		4:57	448	
199	1	HALLWAY A	S	6'	"	HWA-1	S		4:58	326	
200	1	"	S	18"	"	"	S		4:59	341	
201	1	"	W	6'	"	HWA-2	S		5:00	382	
202	1	"	E	2'	"	HWA-3	S		5:01	496	
203	1	"	E	6'	"	HWA-4	S		5:02	360	
204	1	HALLWAY A CLOSET	E	6'	"	HWAC-1	S		5:02	415	
205	1	HALL A BATHROOM	S	4' SWITCH	"	HWBR-1	S		5:03	413	
206	1	"	E	3' OUTLET	"	HWBR-2	S		5:04	363	
207	1	"	E	6'	"	HWBR-3	S		5:05	364	
208	1	"	E	6	"	"	D		5:06	391	
209	1	"	N	2'	"	HWBR 4	S		5:06	362	
210	1	"	W	6'	"	HWBR 5	S		5:07	434	
211	1	OFFICE 2	E	4' OUTLET	"	O2-1	S		5:08	354	
212	1	"	E	2'	"	O2-1	S		5:10	381	
213	1	"	N	18" OUTLET	"	O2-2	S		5:10	373	
214	1	"		6'	"	O2-3	S		5:11	413	

SAMPLE TYPES: S = Sample, D = Duplicate, FB = Field Blank, MB = Media Blank

XRF SCAN FIELD DATA

12/13

Environmental Health & Engineering, Inc.
117 Fourth Avenue, Needham, MA 02494
TEL: (781) 247-4300
FAX: (781) 247-4305

Client: CPSC

Home Address: (b)(6)

Field Person(s): TXM BRM NSE

Date: 8-31-09
Project#: 16512

XRF Serial #: 10755
XRF Scan Time 20 SEC

LOCATION ID	FLOOR	LOCATION	WALL COOR.	SAMPLE LOCATION	SURFACE TYPE	Wall ID	SAMPLE TYPE	SAMPLE SIZE	TIME	XRF Reading	NOTES
215	1	OFFICE 2	S	2'	TOXT	02-4	S		5:13	381	
216	2	MASTER BATH Ceiling	UP	Ceiling	"		S		5:16	320	
217	2	MASTER BED Ceiling	"	"	"		S		5:18	415	
218	2	Reading room (Den)	"	"	"		S		5:19	234	
219	2	OFFICE	"	"	"		S		5:20	395	
220	2	"	"	"	"		D		5:21	347	
221	2	HALL - TOP OF STAIRS	"	"	"		S		5:22	380	
222	1	MAIN LIVING ROOM	"	"	"		S		5:53	381	
223	1	MAIN KITCHEN	"	"	"		S		5:55 ~~5:53~~	363	
224	1	HALLWAY OUTSIDE MAIN KITCHEN	"	"	"		S		5:56	361	
225	1	DINING	"	"	"		S		5:58	378	
226	1	KIDS HALLWAY NEAR KITCHEN 2	"	"	"		S		6:00 ~~5:56~~	341	
227	1	LIBRARY	"	"	"		S		6:02	380	
228	1	MASTER BED 2A	N	NORTH OUTLET 18"	"		S		6:09	324	
229	1	MASTER BED 1A	W	WEST OUTLET 18"	"		S		6:12	385	
230	1	" " 3A	E	EAST OUTLET 18"	"		S		6:15	343	
231	2	2ND FL OFFICE 4A	S	SOUTH	"		S		6:19	370	
232	2	2ND FL DEN 5A	E		"		S		6:21	359	
233	2	" " " 6A			"		S		6:25	415	

SAMPLE TYPES: S = Sample, D = Duplicate, FB = Field Blank, MB = Media Blank

XRF SCA. :IELD DATA

Environmental Health & Engineering, Inc.
117 Fourth Avenue, Needham, MA 02494
TEL: (781) 247-4300
FAX: (781) 247-4305

Client: CPSC

Home Address: (b)(6)

Field Person(s): TXM BRM NSE

Date: 8-31-09
Project#: 16512

XRF Serial #: 10755
XRF Scan Time 20 SEC

LOCATION ID	FLOOR	LOCATION	WALL COOR.	SAMPLE LOCATION	SURFACE TYPE	Wall ID	SAMPLE TYPE	SAMPLE SIZE	TIME	XRF Reading	NOTES
234	2	HALLWAY 1 [7A]	·				S		6:27	408	
235	2	MAST BATH EAST [8A]	E				S		6:30	346	
236	2	MAST CLOSET [9A]	S	18" OUTLET			S		6:32	411	
~~237~~	2	" " [9A]	S	18" OUTLET			D		6:33		
237	2	" LAUNDRY ROOM [10A]	N	18" OUTLET			S		6:35	427	
238	1	ENTRANCE WAY [1A]	~~W~~ S	" "			S				
239	1	LIBRARY [12A]	S	"			S		641	416	
240	1	LIBRARY [13A]	S	"			S				
241	1	HALLWAY NEAR LIBRARY [14A]	S	"			S				
242	1	BATHROOM [15A]	~~E~~ S	"			S				
243	1	OFFICE 2 [16A]	N	"			S				
~~244~~ 244	1	LIVING ROOM [17A]	N	"			S				
245	1	" " [18A]	N	"			S				
246	1	" " [19A]	N	"			S				
247	1	NEW KITCHEN [20A]	S								
249		DINING 24A									
250		DINING 25A									

SAMPLE TYPES: S = Sample, D = Duplicate, FB = Field Blank, MB = Media Blank

VISUAL CORROSION INSPECTION FIELD DATA

Environmental Health & Engineering, Inc.
117 Fourth Avenue, Needham, MA 02494
TEL: (781) 247-4300
FAX: (781) 247-4305

Client: CPSC

Date: 08/31/09

Home Address: (b)(6) [redacted] rginia Beach VA

Project#: 16512

Field Person(s): TXM, DRH, JSE

LOCATION ID	FLOOR	LOCATION	WALL COOR.	SAMPLE LOCATION	CORROSION RATING	Photo # ~~NOTES~~
1A	2	Master Bedroom	W	229	1	47/48
2A	2	Master Bedroom	N	228	1	49/50
3A	2	Master Bedroom	E	230	1	51
4A	2	2nd Floor Office	S	231	1	52-55
5A	2	2nd Floor Den	E	232	1	56
6A	2	2nd Floor Den	S	233	1	57
7A	2	Hallway	W	234	1	58
8A	2	Master Bath	E	235	1	59
9A	2	Master Closet	S	236	1	60
10A	2	Laundery Room	N	237	1	61
11A	1	Entrance Way	S	238	1	62/63
12A	1	1st Floor Den	S	239	1	64
13A	1	1st Floor Den	S	240	1	65
14A	1	Hallway	S	241	1	66
15A	1	Hallway Bathroom	S	242	1	67
16A	1	1st Floor Office	N	243	1	68
17A	1	Living room	W	244	1	69
18A	1	Living room	NW	245	1	70
19A	1	Living room	N	246	1	71/72
20A	1	Kitchen	S	247	1	73
21A	1	Hall b/w kids Rooms	W	248	1	74
22A	1	Boys Room	N		1	75
23A	1	Girls Bedroom	W		1	76
24A	1	Dining Room	N	249	1	77
25A	1	Dining Room	S	250	1	78

CORROSION RATING: 0 = No Grounding Wire, 1 = No Corrosion, 2 = Some Corrosion, 3 = Heavy Corrosion

BULK SAMPLE FIELD DATA

Environmental Health & Engineering, Inc.
117 Fourth Avenue, Needham, MA 02494
TEL: (781) 247-4300
FAX: (781) 247-4305

Client: CPSC

Date: 08/31/09

Home Address: (b)(6) Virginia Beach VA

Project#: 16512

Field Person(s): TXM, DRH, NSE

SAMPLE ID	FLOOR	LOCATION	WALL COOR.	LOCATION ID (SAME AS XRF LOG)	NOTES
105617	2	Master Bedroom		229	1A
105618	2	=	N	228	2A ~~Dup 105619~~
105619	2	=	E	230	3A
105620	2	2nd Floor Office	S	231	4A
105621	2	2nd Fl Den	E	232	5A
105622	2	2nd Fl	S	233	6A
105623	2	2nd Hallway	W	234	7A
105624	2	Master Bath	E	235	8A
105625	2	Master Bath Closet	S	236	9A
105626	2	=	S	236	9A Dup 105625
105627	2	Laundry	N	237	10A
105628	1	Enterance	S	238	11A
105628	1	Den/Library	S	239	12A
105630	1	=	S	240	13A
105631	1	Hallway	S	241	14A
105632	1	Hallway Bath	S	242	15A
105633	1	Living	NW	244	17A
105634	1	Office	S	243	16A
105635	1	Living	NW	245	18A
105636	1	Living	N	246	19A
105637	1	Kitchen	S	247	20A
~~105638~~	~~1~~	~~Hallway Kids Room~~	~~W~~	~~248~~	~~21A~~
~~105639~~	~~=~~	~~=~~	~~=~~	~~=~~	~~= Dup 105638~~
105638	1	Dining	N	249	24A
105639	1	Dining	S	250	25A
105640	1	=	=	250	25A
					No large bulk collected

SAMPLE TYPES: S = Sample, D = Duplicate, FB = Field Blank, MB = Media Blank

08/31/09 (b)(6) Virginia Beach 1/1

HOBO #	LOCATION 3009 LITTLE HAVEN RD	TIME SET 8/31	TIME RETRIEVED
2385022	Office	10:00 AM	
2412439	living	↓	
2412441	Master		

office QT 11

Master QT 12

Living R11370

TOPS. 35500

0A3109VA02

PASSIVE SAMPLE FIELD DATA

Environmental Health & Engineering, Inc.
117 Fourth Avenue, Needham, MA 02494
TEL: (781) 247-4300
FAX: (781) 247-4305

Client: CPSC

Home Address: (b)(6)

Field Person(s): TXM, BRIT, NSE

Date: 09/02/09

Project#: 16512

SAMPLE ID	FLOOR	LOCATION	TARGET ANALYTE	SAMPLE TYPE	START DATE	START TIME	END DATE	END TIME	NOTES
106257	1	GREAT ROOM	ALDEHYDE	S	9-2-09	5:00	9/15/09	15:00	OWNERS USED SILVER
106258	1	"	"	D	"	5:01			POLISH / OPENED WINDOWS
106259	1	"	$NO_2/SO_2/HF$	S	"	5:02			TO VENT STRONG
106260	1	"	"	D	"	5:03			ODORS. 9/13/09
106261	1	"	H_2S	S	"	5:04			OPENED WINDOWS
106262	1	"	"	D	"	5:07			APPROX 1 HOUR
106263	1	"	OZONE	S	"	5:08			
106264	1	"	"	D	"	5:09			
106265	1	OUTSIDE	ALDEHYDE	S	"	5:10			
106266	1	"	$NO_2/SO_2/HF$	S	"	5:11			SAMPLE LOST WIND KNOCKED OVER STAND
106267	1	"	H_2S	S	"	5:12			
106268	1	"	OZONE	S	"	5:12			
106269	1	MASTER BED	ALDEHYDE	S	"	5:23			
106270	1	"	$NO_2/SO_2/HF$	S	"	5:24			
106271	1	"	H_2S	S	"	5:24			
106272	1	"	OZONE	S	"	5:28			
106273	1	~~BEDROOM~~ OFFICE	ALDEHYDE	S	"	5:28			
106274	1	"	$NO_2/SO_2/HF$	S	"	5:28			
106275	1	"	H_2S	S	"	5:28			

SAMPLE TYPES: S = Sample, D = Duplicate, FB = Field Blank, MB = Media Blank

083109VA02

PASSIVE SAM _E FIELD DATA

Environmental Health & Engineering, Inc.
117 Fourth Avenue, Needham, MA 02494
TEL: (781) 247-4300
FAX: (781) 247-4305

Client: CPSC

Date: 9-2-09

Home Addres (b)(6)

Project#: 16512

Field Person(s): TXM, BKH, NSE

SAMPLE ID	FLOOR	LOCATION	TARGET ANALYTE	SAMPLE TYPE	START DATE	START TIME	END DATE	END TIME	NOTES
✓ 106276	2	OFFICE	Ozone	S	9-2	5:29	9/15	15:00	
✓ 106277	1	GREAT ROOM	Coupon	S	9-2	5:19			
106278	1	OUTSIDE	"	S	9-2	5:19			
✓ 106279	2	MASTER BED	"	S	9-2	5:27			
✓ 106280	2	OFFICE	"	S	9-2	5:29			
✓ 106281	2	SUPPLY DIFFUSER - ENTRANCE	"	S	9-2	5:30			

SAMPLE TYPES: S = Sample, D = Duplicate, FB = Field Blank, MB = Media Blank

PHOTO FIELD DATA

Environmental Health & Engineering, Inc.
117 Fourth Avenue, Needham, MA 02494
TEL: (781) 247-4300
FAX: (781) 247-4305

Client: CPSC

Date: 8-31-09

Home Address: (b)(6)

Project#: 16512

Field Person(s): TXM, BKH, NSE

Camera ID: Cool Pix

PHOTO NO.	FLOOR	LOCATION	NOTES
1-3, 4	1	1ST FLOOR AIR HANDLER - 'ARMSTRONG AIR'	AHU I.D. DATA
5	1	"	CONDENSATE TRAP
6	1		
7-9	1	1st Floor Air handler Coils	
10-14	ATTIC	ATTIC AHU	NAMEPLATE DATA/CONDENSATE TRAP
15,16,17	ATTIC	AHU COILS	
18-21	OUTSIDE	SPLIT A/C - COMPRESSORS	NEW ADDITION 20,21 = I.D PLATE
22-24		" "	O/D HOUSE 24 = I.D. PLATE
		~~LAUNDRY ROOM~~	
25/26	1	Pipefittings under sink	Half bath
27	1	Brass Decoration	
28	1	Copper Basket Rim	
29	1	Jar Clasp	
30	1	Pipes + Fittings under kitchen sink	
31	1	Copper letter holders	
32	1	Silver Dish	
33	1	Pipe fittings under sink	
34	1	Pipes off air handler	
35	1	Coolant pipe	
36	2	Master Bathroom showerhead	
37	2	Sink pipes Master Bath	Sink #1
38	2	"	Sink #2
39	2	Pipes in Laundry Room	
40	2	"	
41	1	Pipes/Fittings under sink	Kitchen #2
42	1	Copper Dish	
43-45	1	Air handler #3 I.D plate	Coils inaccessible